FORM NO. 2 R 10/09

ARM 36.22.307, 601, 605, 1003, 1004, 1011, 1013, 1103, 1222, 1240, 1301, 1306, 1309, and 1417

RECEIVED

JUL 18 2018

MONTANA BOARD OF OIL & GAS CONSERVATION • BILLINGS

Submit In Quadruplicate To:

MONTANA BOARD OF OIL AND GAS CONSERVATION
2535 ST. JOHNS AVENUE
BILLINGS, MONTANA 59102

SUNDRY NOTICES AND REPORT OF WELLS

Operator **Alta Vista Oil Corporation**	Lease Name: **MTM 83777**
Address **2611 East Highway 14**	Type (Private/State/Federal/Tribal/Allotted): **Federal**
City **Clearmont** State **WY** Zip Code **82835**	Well Number: **Doc Holiday-1H**
Telephone 210-572-8252 Fax	
Location of well (1/4-1/4 section and footage measurements): **SESW** **145' FSL & 2104' FWL**	Unit Agreement Name: **Wild Bill**
	Field Name or Wildcat: **Wildcat**
	Township, Range, and Section: **T9S, R41E, Section 21**
API Number: **25 | 003 | 22952** (State County Well)	Well Type (oil, gas, injection, other): **Oil**
	County: **Big Horn**

Indicate below with an X the nature of this notice, report, or other data:

Notice of Intention to Change Plans	☐	Subsequent Report of Mechanical Integrity Test	☐
Notice of Intention to Run Mechanical Integrity Test	☐	Subsequent Report of Stimulation or Treatment	☐
Notice of Intention to Stimulate or to Chemically Treat	☒	Subsequent Report of Perforation or Cementing	☐
Notice of Intention to Perforate or to Cement	☐	Subsequent Report of Well Abandonment	☐
Notice of Intention to Abandon Well	☐	Subsequent Report of Pulled or Altered Casing	☐
Notice of Intention to Pull or Alter Casing	☐	Subsequent Report of Drilling Waste Disposal	☐
Notice of Intention to Change Well Status	☐	Subsequent Report of Production Waste Disposal	☐
Supplemental Well History	☐	Subsequent Report of Change in Well Status	☐
Other (specify) _____	☐	Subsequent Report of Gas Analysis (ARM 36.22.1222)	☐
_____	☐	_____	☐

Describe Proposed or Completed Operations:

Describe planned or completed work in detail. Attach maps, well-bore configuration diagrams, analyses, or other information as necessary. Indicate the intended starting date for proposed operations or the completion date for completed operations.

The attached procedures will be followed for completion of the Doc Holiday-1H well. This sundry notice and the attached procedures are being submitted in accordance with the 36.22.608.

BOARD USE ONLY

Approved AUG 13 2018
Date

BJ Accepted for record purposes only
Name Title

The undersigned hereby certifies that the information contained on this application is true and correct:

7/17/18
Date

Signed (Agent)

Ben Shoup, Regulatory Advisor
Print Name and Title

Telephone: 307-299-5950

SUPPLEMENTAL INFORMATION

RECEIVED
JUL 18 2018
MONTANA BOARD OF OIL & GAS CONSERVATION • BILLINGS

NOTE: Additional information or attachments may be required by Rule or by special request.

Plot the location of the well or site that is the subject of this notice or report.

Range **41E**

Township **9S**

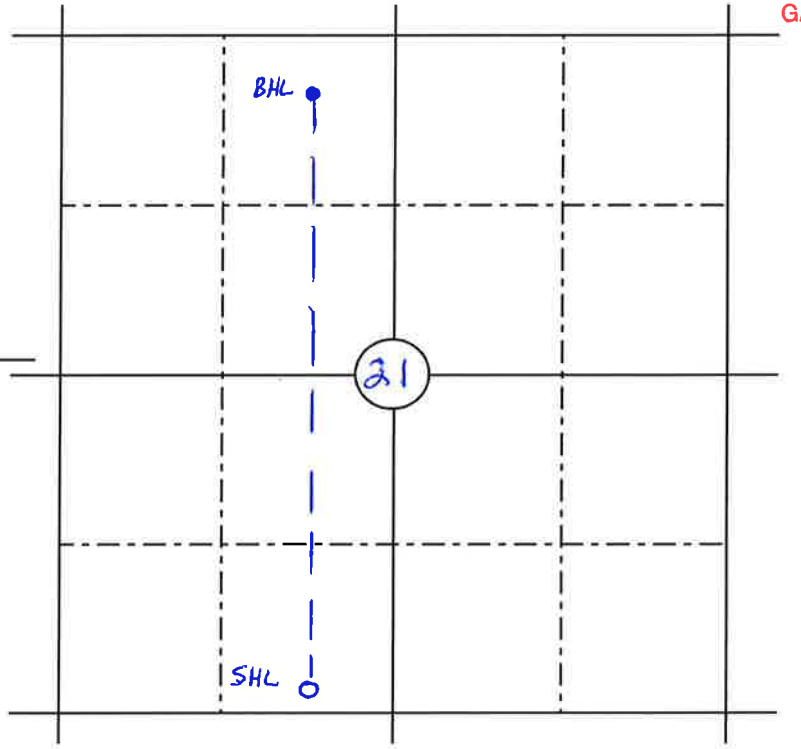

BOARD USE ONLY	CONDITIONS OF APPROVAL

The operator must comply with the following condition(s) of approval:

Failure to comply with the conditions of approval may void this permit.

RECEIVED
JUL 18 2018
MONTANA BOARD OF OIL &
GAS CONSERVATION • BILLINGS

ALTAVISTA
OIL CORPORATION

DOC HOLIDAY 1H
(CONFIDENTIAL)

API#: 25-003-22952
AFE #: 27-18-0265-CP
Routing ID: 551146

COMPLETION PROCEDURE
27 STAGES

BIG HORN COUNTY, MT

BY: RAY MILLER

17 JULY 2018

ALTAVISTA OIL CORPORATION

OBJECTIVE:

The Doc Holiday 1H is a new horizontal drilled out from the vertical pilot well drilled in 2017 to be fracture stimulated down 5-1/2" 20ppf HCP-110 EC casing. Well has a planned treated lateral length of 3,815 ft to be completed in 27 stages with 10 MM lb of sand (2,500 lb/FTL, 15% 30/50 mesh, 85% 20/40 White) and 180,000 bbls of 2% KCl water.

WELL DATA:

Well Name:	**Doc Holiday #1H**	
Location:	**Big Horn County, MT**	
Field/Formation	**Wildcat**	
API#:	**25-003-22952**	
AFE#:	**27-18-0265-CP**	
Surface Latitude:	**45.020407**	
Surface Longitude:	**-106.71751**	
KB	21.0	ft
KOP, MD	7,530	ft, MD
TD	12,500	ft, MD
PBTD, MD	12,500	ft, MD
PBTD, TVD	8,420	ft, TVD
NO XO	N/A	ft, MD
Packer Depth, MD		ft, MD
Heel Perf Limit	8,500	ft, MD
Top Perf (Detail Tab)	**8,501**	ft, MD
Stim. Lateral:	4,000	ft, MD
Total Stages:	27	
Clusters/stage:	4	
Cluster Spacing	37.0	ft
Avg. Stage Length	149	ft

ALTAVISTA OIL CORPORATION

VENDOR CHECKLIST

PURPOSE	VENDOR
FRAC	TBA
WIRELINE	KLX
FRAC STACK	CACTUS
CHEMICALS/ACID	FRAC PROVIDER
KCL	ANCHOR FLUIDS
FLOWBACK IRON	FLARE
COILED TUBING	CTS
RENTALS/WATER TRANSFER	RAIN FOR RENT

Casing	Size	Weight	Grade	Thread	Setting Depth
Surface Casing	13 3/8"	54.5	J-55	BTC	2,023' MD / 2,023' TVD
Intermediate Casing	9 5/8"	43.5	L-80	LTC	7,462' MD / 7,461' TVD
Production Casing	5.5"	20	HCP-110	DWC	PBTD (FC) @ 11,078' MD 6,912' TVD; Marker Jts @ 7,618' & 6,219'

Dimensions and Strengths	ID (in)	Drift (in)	Cap. (Bbl/ft)	Burst (80%)	Collapse	Body Yield Stgth (Thrd lbs)
13-3/8" 54.5# J-55	12.615"	12.46"	0.1546	2,730	1,130	909
9-5/8" 43.5# L-80	8.755"	8.60"	0.0744	6,344	3,810	728
5-1/2" 20# HCP-110	4.778"	4.65	0.0222	12,640	11,100	641

NOTES:

- **5.5" full string. Max Pressure = 10,000 psi**
  - **Stagger trips from 9000-9500 psi**
- **H2S gas possible**

NOTE:

Please have Wireline company send out the following items:

- **CCL log from first plug run**
- **Gun Schematic**
- **Final Perforation and Plug Records**
-

DIRECTIONS TO LOCATION:

From Decker Montana Post Office: travel northeast on Montana Hwy 314 for 2.8 miles and take a right on Otter Road. Signage for Otter Road is not clear: right turn is the road right after railroad crossing with gates after coming down the hill. Continue down Otter Road for 5.7 miles and turn right onto road leading to lease. Speed limit on this road is a strict 15 mph as it is a ranch road. Continue on ranch road for 2.7 miles to location on the east side. Total distance from Decker, MT to Doc Holiday location is ~11.2 miles.

------ Close ranch gate behind you. Violators will be asked to leave. ------

ALTAVISTA OIL CORPORATION

Wellhead Information
A Section – 13-5/8" 5M w/ 2-1/16" 5M
B Section - 7-1/16" 10M w/ 1-13/16" 10M
Pre-Job Considerations
1. Max Pressure – 10,000 psi
2. Monitor pressure on backside
3. See attached list for vendors and GL acct codes
4. Conduct safety meetings/headcount each day prior to any activity
5. Review JSA before every wireline run and pressure test
6. Engineer contact: Ray Miller
7. Send text updates: Glenn Bone, Neal Jack

Use following Chemical Schedule: (Frac Company to provide frac additives & acid).

TYPE	CHEMICAL	CONC (gpt)	PLANNED VOLUME (gals)	COMMENT
CLAY STABILIZER (ON THE FLY)	**2% Potassium Chloride**	**0.02**	**149500**	**RUN THROUGHOUT**
Clay Stabilizer	**CSA-3M**	**2**	**15000**	**Run Throughout**
SCALE INHIBITOR	SCI-38	0.3	2300	RUN THROUGHOUT
SCALE INHIBITOR II	SCI-62	0.3	2300	DO NOT RUN IN CROSSLINK
SURFACTANT	SFT-82 Surflo 420	0.25	1900	RUN THROUGHOUT
FR	FRP-E38	0.4	3000	AS NEEDED
BIOCIDE	Aqucar	0.4	3000	RUN THROUGHOUT
GUAR GEL	LGA-33	5	37500	THROUGH CROSSLINK
HI-TEMP BREAKER	BHL-68	0.5	3800	AS TESTED
ENCAP. BREAKER	BHE-18 BE-5HT	0.2	1500	AS TESTED
LOW pH BUFFER	BFL-28	1.1	8300	AS TESTED
HIGH pH BUFFER	BFH-98	0.25	1900	AS TESTED
Surf CROSSLINKER	XLB-88	1.3	9800	AS TESTED
Delayed CROSSLINKER	XLB-36	1.3	9800	AS TESTED

1.0 ND night cap and NU 10K Frac Stack (see diagram). Pressure and function test manual and hydraulic valves to 10,000 psi for 10 minutes.

ALTAVISTA OIL CORPORATION

2.0 MIRU frac crew, wireline company, flowback crew, lubricator, water transfer, and H2S monitors.

3.0 Set 10 water frac tanks, 2 KCl tanks, and 1 acid frac tank manifolded separately.

4.0 Pump stage 1 per attached pump schedule; perforations below:

Stage 1	Cluster #	Gun Length, ft	SPF	Holes	Phasing	Top	Bottom	PBTD
	1	1	6	6	60	12,489	12,490	12,500
Mid-Perf MD	2	1	6	6	60	12,451	12,452	
12,433	3	1	6	6	60	12,413	12,414	
Mid-Perf TVD	4	1	6	6	60	12,375	12,376	
8,215								
Total Holes								
24								

5.0 Continue to plug and perforate Stages 2-23 w/ 3-1/8" and 60 deg phasing as per table below.

5.1 Run CCL log with Stage 2 plug and guns. Log OOH. Have wireline send Log and Gun Schematic to Engineer.

6.0 Frac Stages 2-23 per attached pump schedule

6.1 **1 Loads 30/50 Mesh and 8 loads of 20/40 Each Stage**

6.2 NOTES on Pump Schedule:

6.2.1 "Ball Pressure" – Displace ball at 10 BPM. At constant rate, record pressure before ball hits, and after ball hits.

6.2.2 "Breakdown Pressure" – maximum pressure right after ball hits

6.2.3 "Acid Drop Pressure"– Allow acid to hit perfs at 10 BPM for 1 minute. Record pressure at 1 minute mark, then increase rate for remainder of acid. Acid Pressure will be difference between Breakdown Pressure and that 1 Minute Pressure

6.2.4 Record step-down test after acid (3-4 steps). Also record ISIP and 5/10/15 minute leakoff pressures

6.2.5 Record step up test (3-4 steps) after initial shut-in until max rate is established (+/- 60 BPM). Start sand after rate is established.

6.2.6 Record step-down test after job (3-4 steps) and record Final ISIP and 5/10/15 minute leakoff

7.0 RD Stimulation equipment, frac stack, and wireline.

8.0 MIRU 2-3/8" CTU with flowback equipment, double choke manifolds, plug catcher and hydraulic dump.

9.0 MU BHA as follows (see attached schematic):

2.88" Weld-On Coil Connector/BPV + 2.88" bi-jar + 2.88" disconnect + 2.88" XRV + 2.88" Bend sub + 2.88" motor + 3.75" rotary sub + 4.5" roller cone bit (JZ Rock Bit)

ALTAVISTA OIL CORPORATION

10.0 RIH w/ 4-1/2" roller cone bit to first plug at +/- 7,415' MD. RIH at 120'/min to curve, slow down to 80-100'/min.

10.1 At each plug record time tagged, tagged depth, set depth, pump rate, return rate, coil pressure, casing pressure, choke, drill time, wash down time, CT weight before, CT Weight on plug, and notes on returns.

10.2 Pump 5 BBL gel sweeps before and after each plug.

10.3 Drill out plugs with +/- 3 pts down.

10.4 Short trips every 5-7 plugs OR as needed based on cutting size and DLS. Lead short trips by 10/10/10 BBL sweeps.

11.0 Continue down to PBTD at 12,375' MD. Circulate well clean 10/10/10 BBL sweeps. POOH at ~30 ft/min to +/- KOP at 6500' MD.

Directional Survey Information:

Deviation	TVD	MD
Deviation = 20° @	7,896	7,900
Deviation = 40° @	8,070	8,100
Deviation = 60° @	8,202	8,300
Deviation = 80° @	8,276	8,500
Deviation = 90° @	8,287	8,600

12.0 Pump Hi Vis sweep down casing followed by **277 bbls** TFW. POOH and record Shut-in pressure.

13.0 RDMO all CT related equipment.

14.0 Make note of any equipment left on location after RDMO, provide flow back personnel list of equipment that they are responsible for releasing.

15.0 Will plan to run ESP & tubing immediately after plug drillout

15.1 Equipping procedure to follow

ALTAVISTA OIL CORPORATION

PERFORATIONS

Stage 1	Cluster #	Gun Length, ft	SPF	Holes	Phasing	Top	Bottom	PBTD
	1	1	6	6	60	12,489	12,490	12,500
Mid-Perf MD	2	1	6	6	60	12,451	12,452	
12,433	3	1	6	6	60	12,413	12,414	
Mid-Perf TVD	4	1	6	6	60	12,375	12,376	
8,215								
Total Holes								
24								

Stage 2	Cluster #	Gun Length, ft	SPF	Holes	Phasing	Top	Bottom	Plug
	1	1	6	6	60	12,337	12,338	12,357
Mid-Perf MD	2	1	6	6	60	12,300	12,301	
12,282	3	1	6	6	60	12,263	12,264	
Mid-Perf TVD	4	1	6	6	60	12,226	12,227	
8,219								
Total Holes								
24								

Stage 3	Cluster #	Gun Length, ft	SPF	Holes	Phasing	Top	Bottom	Plug
	1	1	6	6	60	12,188	12,189	12,208
Mid-Perf MD	2	1	6	6	60	12,151	12,152	
12,133	3	1	6	6	60	12,114	12,115	
Mid-Perf TVD	4	1	6	6	60	12,077	12,078	
8,221								
Total Holes								
24								

Stage 4	Cluster #	Gun Length, ft	SPF	Holes	Phasing	Top	Bottom	Plug
	1	1	6	6	60	12,039	12,040	12,059
Mid-Perf MD	2	1	6	6	60	12,002	12,003	
11,984	3	1	6	6	60	11,965	11,966	
Mid-Perf TVD	4	1	6	6	60	11,928	11,929	
8,225								
Total Holes								
24								

Stage 5	Cluster #	Gun Length, ft	SPF	Holes	Phasing	Top	Bottom	Plug
	1	1	6	6	60	11,890	11,891	11,910
Mid-Perf MD	2	1	6	6	60	11,853	11,854	
11,835	3	1	6	6	60	11,816	11,817	
Mid-Perf TVD	4	1	6	6	60	11,779	11,780	
8,227								
Total Holes								
24								

Stage 6	Cluster #	Gun Length, ft	SPF	Holes	Phasing	Top	Bottom	Plug
	1	1	6	6	60	11,741	11,742	11,761
Mid-Perf MD	2	1	6	6	60	11,704	11,705	
11,686	3	1	6	6	60	11,667	11,668	
Mid-Perf TVD	4	1	6	6	60	11,630	11,631	
8,230								
Total Holes								
24								

ALTAVISTA OIL CORPORATION

Stage 7	Cluster #	Gun Length, ft	SPF	Holes	Phasing	Top	Bottom	Plug
	1	1	6	6	60	11,592	11,593	11,612
Mid-Perf MD	2	1	6	6	60	11,555	11,556	
11,537	3	1	6	6	60	11,518	11,519	
Mid-Perf TVD	4	1	6	6	60	11,481	11,482	
8,232								
Total Holes								
24								

Stage 8	Cluster #	Gun Length, ft	SPF	Holes	Phasing	Top	Bottom	Plug
	1	1	6	6	60	11,443	11,444	11,463
Mid-Perf MD	2	1	6	6	60	11,406	11,407	
11,388	3	1	6	6	60	11,369	11,370	
Mid-Perf TVD	4	1	6	6	60	11,332	11,333	
8,236								
Total Holes								
24								

Stage 9	Cluster #	Gun Length, ft	SPF	Holes	Phasing	Top	Bottom	Plug
	1	1	6	6	60	11,294	11,295	11,314
Mid-Perf MD	2	1	6	6	60	11,257	11,258	
11,239	3	1	6	6	60	11,220	11,221	
Mid-Perf TVD	4	1	6	6	60	11,183	11,184	
8,238								
Total Holes								
24								

Stage 10	Cluster #	Gun Length, ft	SPF	Holes	Phasing	Top	Bottom	Plug
	1	1	6	6	60	11,145	11,146	11,165
Mid-Perf MD	2	1	6	6	60	11,108	11,109	
11,090	3	1	6	6	60	11,071	11,072	
Mid-Perf TVD	4	1	6	6	60	11,034	11,035	
8,242								
Total Holes								
24								

Stage 11	Cluster #	Gun Length, ft	SPF	Holes	Phasing	Top	Bottom	Plug
	1	1	6	6	60	10,996	10,997	11,016
Mid-Perf MD	2	1	6	6	60	10,959	10,960	
10,941	3	1	6	6	60	10,922	10,923	
Mid-Perf TVD	4	1	6	6	60	10,885	10,886	
8,244								
Total Holes								
24								

Stage 12	Cluster #	Gun Length, ft	SPF	Holes	Phasing	Top	Bottom	Plug
	1	1	6	6	60	10,847	10,848	10,867
Mid-Perf MD	2	1	6	6	60	10,810	10,811	
10,792	3	1	6	6	60	10,773	10,774	
Mid-Perf TVD	4	1	6	6	60	10,736	10,737	
8,248								
Total Holes								
24								

ALTAVISTA OIL CORPORATION

Stage 13	Cluster #	Gun Length, ft	SPF	Holes	Phasing	Top	Bottom	Plug
	1	1	6	6	60	10,698	10,699	10,718
Mid-Perf MD	2	1	6	6	60	10,661	10,662	
10,643	3	1	6	6	60	10,624	10,625	
Mid-Perf TVD	4	1	6	6	60	10,587	10,588	
8,249								
Total Holes								
24								

Stage 14	Cluster #	Gun Length, ft	SPF	Holes	Phasing	Top	Bottom	Plug
	1	1	6	6	60	10,549	10,550	10,569
Mid-Perf MD	2	1	6	6	60	10,512	10,513	
10,494	3	1	6	6	60	10,475	10,476	
Mid-Perf TVD	4	1	6	6	60	10,438	10,439	
8,253								
Total Holes								
24								

Stage 15	Cluster #	Gun Length, ft	SPF	Holes	Phasing	Top	Bottom	Plug
	1	1	6	6	60	10,400	10,401	10,420
Mid-Perf MD	2	1	6	6	60	10,363	10,364	
10,345	3	1	6	6	60	10,326	10,327	
Mid-Perf TVD	4	1	6	6	60	10,289	10,290	
8,255								
Total Holes								
24								

Stage 16	Cluster #	Gun Length, ft	SPF	Holes	Phasing	Top	Bottom	Plug
	1	1	6	6	60	10,251	10,252	10,271
Mid-Perf MD	2	1	6	6	60	10,214	10,215	
10,196	3	1	6	6	60	10,177	10,178	
Mid-Perf TVD	4	1	6	6	60	10,140	10,141	
8,259								
Total Holes								
24								

Stage 17	Cluster #	Gun Length, ft	SPF	Holes	Phasing	Top	Bottom	Plug
	1	1	6	6	60	10,102	10,103	10,122
Mid-Perf MD	2	1	6	6	60	10,065	10,066	
10,047	3	1	6	6	60	10,028	10,029	
Mid-Perf TVD	4	1	6	6	60	9,991	9,992	
8,261								
Total Holes								
24								

Stage 18	Cluster #	Gun Length, ft	SPF	Holes	Phasing	Top	Bottom	Plug
	1	1	6	6	60	9,953	9,954	9,973
Mid-Perf MD	2	1	6	6	60	9,916	9,917	
9,898	3	1	6	6	60	9,879	9,880	
Mid-Perf TVD	4	1	6	6	60	9,842	9,843	
8,265								
Total Holes								
24								

ALTAVISTA OIL CORPORATION

Stage 19	Cluster #	Gun Length, ft	SPF	Holes	Phasing	Top	Bottom	Plug
	1	1	6	6	60	9,804	9,805	9,824
Mid-Perf MD	2	1	6	6	60	9,767	9,768	
9,749	3	1	6	6	60	9,730	9,731	
Mid-Perf TVD	4	1	6	6	60	9,693	9,694	
8,267								
Total Holes								
24								

Stage 20	Cluster #	Gun Length, ft	SPF	Holes	Phasing	Top	Bottom	Plug
	1	1	6	6	60	9,655	9,656	9,675
Mid-Perf MD	2	1	6	6	60	9,618	9,619	
9,600	3	1	6	6	60	9,581	9,582	
Mid-Perf TVD	4	1	6	6	60	9,544	9,545	
8,268								
Total Holes								
24								

Stage 21	Cluster #	Gun Length, ft	SPF	Holes	Phasing	Top	Bottom	Plug
	1	1	6	6	60	9,506	9,507	9,526
Mid-Perf MD	2	1	6	6	60	9,469	9,470	
9,451	3	1	6	6	60	9,432	9,433	
Mid-Perf TVD	4	1	6	6	60	9,395	9,396	
8,272								
Total Holes								
24								

Stage 22	Cluster #	Gun Length, ft	SPF	Holes	Phasing	Top	Bottom	Plug
	1	1	6	6	60	9,357	9,358	9,377
Mid-Perf MD	2	1	6	6	60	9,320	9,321	
9,302	3	1	6	6	60	9,283	9,284	
Mid-Perf TVD	4	1	6	6	60	9,246	9,247	
8,274								
Total Holes								
24								

Stage 23	Cluster #	Gun Length, ft	SPF	Holes	Phasing	Top	Bottom	Plug
	1	1	6	6	60	9,208	9,209	9,228
Mid-Perf MD	2	1	6	6	60	9,171	9,172	
9,153	3	1	6	6	60	9,134	9,135	
Mid-Perf TVD	4	1	6	6	60	9,097	9,098	
8,278								
Total Holes								
24								

Stage 24	Cluster #	Gun Length, ft	SPF	Holes	Phasing	Top	Bottom	Plug
	1	1	6	6	60	9,059	9,060	9,079
Mid-Perf MD	2	1	6	6	60	9,022	9,023	
9,004	3	1	6	6	60	8,985	8,986	
Mid-Perf TVD	4	1	6	6	60	8,948	8,949	
8,280								
Total Holes								
24								

ALTAVISTA OIL CORPORATION

Stage 25	Cluster #	Gun Length, ft	SPF	Holes	Phasing	Top	Bottom	Plug
	1	1	6	6	60	8,910	8,911	8,930
Mid-Perf MD	2	1	6	6	60	8,873	8,874	
8,855	3	1	6	6	60	8,836	8,837	
Mid-Perf TVD	4	1	6	6	60	8,799	8,800	
8,284								
Total Holes								
24								

Stage 26	Cluster #	Gun Length, ft	SPF	Holes	Phasing	Top	Bottom	Plug
	1	1	6	6	60	8,761	8,762	8,781
Mid-Perf MD	2	1	6	6	60	8,724	8,725	
8,706	3	1	6	6	60	8,687	8,688	
Mid-Perf TVD	4	1	6	6	60	8,650	8,651	
8,286								
Total Holes								
24								

Stage 27	Cluster #	Gun Length, ft	SPF	Holes	Phasing	Top	Bottom	Plug
	1	1	6	6	60	8,612	8,613	8,632
Mid-Perf MD	2	1	6	6	60	8,575	8,576	
8,557	3	1	6	6	60	8,538	8,539	
Mid-Perf TVD	4	1	6	6	60	8,501	8,502	
8,283								
Total Holes								
24								

PUMP SCHEDULE: STAGES 1-27

STAGE NAME	FLUID TYPE	PROPPANT TYPE	CLEAN VOL (BBLS)	SLURRY RATE (BPM)	FR (LB/GAL)	PROP CONC (PPA)	STAGE TIME (MINS)	CALC PROP VOL (LBS)
Establish Injection	SLICKWATER	-	20	10	0.50		2	
PAD	20# Crosslink	-	1,200	60	0.25		20	
PROPPANT	20# Linear	30/50 White	500	60	0.25	0.50	8	10,500
PROPPANT	20# Linear	30/50 White	500	60	0.25	0.75	8	15,750
PROPPANT	20# Linear	30/50 White	500	60	0.25	1.00	8	21,000
PROPPANT	20# Linear	20/40 White	550	60	0.25	1.00	9	23,100
PROPPANT	20# Linear	20/40 White	550	60	0.25	1.50	9	34,650
PROPPANT	20# Crosslink	20/40 White	550	60	0.25	2.00	9	46,200
PROPPANT	20# Crosslink	20/40 White	550	60	0.25	3.00	9	69,300
PROPPANT	20# Crosslink	20/40 White	420	60	0.25	4.00	7	70,560
PROPPANT	20# Crosslink	20/40 White	400	60	0.25	5.00	7	84,000
FLUSH	SLICKWATER		275	60	0.50		5	0
Wireline	SLICKWATER		275	10	0.50		28	0
								0
		-						0
		-						
TOTAL/STAGE			6,290				129	375,060
			0.21					

Top Perforation:	0
Bottom Perforation:	12490
TVD:	8217
Wellbore Volume:	0

Average Rate:	40
Average Pressure:	9,000

Chemical GAL/MGAL (Stage)		Total Gal
Biocide	0.4	77
Surfactant	0	0
Scale Inhibitor	0.4	77
Friction Reducer	0.50	96
Gel	0.00	0
Breaker	0.00	0
Low Buffer	0.00	0
Cross Linker	0.00	0
Caustic	0.00	0
Clay Inhibitor	2.00	384
Treated Water Volume, BBL=		4,570

Proppant Design (Sta	Pounds	
	0	0.0
20/40 White	327,810	7.0
30/50 White	47,250	1.0
		0.0
Total Sand, lb/stg	375,060	
Total Sand, lb/ft	2,517	
Total Sand, lb	10,126,620	#DIV/0!

Fluid Design (Stage):	
Total Water (bbls)	BBL
7 1/2% HCL	0
SLICKWATER	570
LINEAR GEL	0
XLINK GEL	3,120
Total Fluid, bbl/stg	3,690
Total Fluid, gal/ft	1,040
Total Fluid, bbls	99,630

ALTAVISTA OIL CORPORATION

AFE GL CODES

SAN ANTONIO COMPLETIONS - GL CODES

	Acct #	G/L Acct Text	Account Description
CHANGED	70034	Formation and Well Stimulation Pumping Service	Use for horsepower and related pump charges. DOES NOT include proppant (70198), chemicals (70007), plugs (70289) or fuel (70037).
NEW	70007	Chemicals	Chemicals used in well stimulation activities including fracturing and coil tubing.
NEW	70198	Sand/Proppant	Cost of sand/proppant, including the cost of loading and transportation.
NEW	70248	Fishing and Milling	Fishing - Time required to fish w/pipe or wireline. Includes all operations from running free point indicator, back-off tools & time spent jarring & working pipe w/fishing bottom hole assembly. Milling - All time associated w/removing "metal" not drilling plugs
NEW	70285	Water Transfer	Costs related to the transport of water to location for operations, including pumps, equipment and personnel charges
NEW	70291	Frac Valve / Frac Tree	Includes the cost of the frac tree, frac head and frac valve rental, transport, maintenance.
NEW	70290	Water Heating	Costs associated with heating water or fluids during operations
NEW	70289	Frac Plugs	Cost of plugs used in hydraulic fracturing operations
NEW	70169	Camp Rentals	Rental and delivery costs associated with house trailers
NEW	70114	Emulsion/Clean Oil Trucking	Includes amount paid to third parties for trucking or hauling for handling of oil emulsion or clean oil
NEW	70186	Flowback Tester	Labor and equipment (test hands/manifolds, etc...) related to flowback and production testing. DOES NOT INCLUDE FLOWBACK EQUIPMENT DURING FRAC (70031)
NEW	70187	Pump Truck Service	Capital/Expenditure - Flush, Killwell/well control, load and test
NEW	70242	Slickline Services	Includes slickline (non-electric wireline) unit, tools & personnel - plugs / proags, etc.
NEW	70529	Safety Case	Safety related costs, e.g. Safety Technicians on location DOES NOT INCLUDE SAFETY RESTRAINTS (70031)
NEW/NOT COMMON	70287	Microseismic	Costs related to the acquisition of Microseismic and all associated equipment and rentals.
NEW/NOT COMMON	70122	Pressure Truck Expense	To track pressure truck work used to inject methanol or condensate into a well or pipeline to break up hydrates, paraffin wax, or push stuck pigs. DOES NOT INCLUDE PUMPS FOR STIMULATION (70034)
NEW/NOT COMMON	70286	Water Treatment	NOT FOR WATER TREATED ON LOCATION. Includes equipment rental , chemicals, filtration and associated trucking/personnel for the purpose of recycling or reconditioning of water to be used for fracturing operations.
COMMON USE	70017	Contract Labor	Includes contract labor incident to any operations but not included under other account classifications
COMMON USE	70019	Contract Rigs - Daywork	Includes drillings, completions, recompletion, workover, service or pulling units and related work performed on an hourly, daily, or fixed-rate basis, including all third-party charges incident to the contract such as mudbuster and shaker screens
COMMON USE	70021	Contract Supervision	Includes fees, salaries, and expenses of a contract supervisor.
COMMON USE	70031	Equipment Rental	Includes equipment not furnished by the contractor such as trailer rental, blowout preventers, and de-gasers. DOES NOT include charges for frac tank and water tank rentals (70077)
COMMON USE	70035	Formation Testing	Includes bottom hole pressure gauges, DFIT, and Tracers
COMMON USE	70037	Fuel	Includes the power and fuel, such as gas, butane, fuel oil, gasoline, and electric power.
COMMON USE	70049	Logging	Includes openhole and cased hole electric line logging including CBL logs, perforating, and other Wirline and E-Line servies. DOES NOT include slickline i.e. setting packers (70242).
COMMON USE	70065	Road and Site Preparation	Includes cleaning up location, building burms, filling cellars, and making entrances to location
COMMON USE	70067	Salt Water Disposal	Includes the handling, hauling, and disposing of salt water produced in conjunction with oil and gas products. Also includes the allocated costs of a salt water disposal system.
COMMON USE	70069	Coiled Tubing	Equipment and related services provided for coiled tubing operations including nitrogen services, pumping equipment and downhole tools.
COMMON USE	70074	Trucking and Hauling	Includes trucking or hauling incident to any operations but not included under other account classifications or the service unit.
COMMON USE	70075	Tubing Convey Perforating	Includes guns used for TCP work but not Coil work or BHA during toe-prep.
COMMON USE	70077	Water	Includes the cost of water/brine incident to any well operation including lease water and water tank rental. Does not include water transport (70285)
COMMON USE	71032	Other Subsurface Equipment	Includes subsurface equipment such as tubing anchor, retrievable packers, permanent packers, catchers, seating nipples, sliding sleeves, flow couplings, blast joints, mud/gas anchors, sinker bars, and gravel pack screens.
COMMON USE	71056	Wellhead Assembly	Includes Christmas trees, casing head, casing spool, tubing head, valves, flow beams, seal assemblies, spools, gaskets, studs, and bolts.
COMMON USE	71053	Tubing	Used for production tubing costs
NOT COMMON	70076	Tubular Inspection/Testing	Includes inspection of any tubular equipment
NOT COMMON	70003	Bits Coreheads and Reamers	Includes drilling bits, coreheads, and reamers used in project operations.
NOT COMMON	70005	Catering and Groceries	Includes food, food services and bunks for third-party crews.
NOT COMMON	70008	Communications	Communication equipment such as internet or cell phone boosters.
NOT COMMON	70012	Company Vehicle and/or Boat	Includes PMTA rates for vehicles and fixed rate charges for boats that are incident to lease operations. Actual operating expenses for vehicles and boats are recorded to 65505, such as gas, oil, repairs, etc.
NOT COMMON	70025	Drilling Fluids	Includes caustic soda, Quebraco, soda ash, sapp, crude oil, Hi-flow, and gelant used to condition the hole or maintain circulation.
NOT COMMON	70288	Snubbing	Equipment and all related services provided for snubbing operations including nitrogen services, pumping equipment and downhole tools.

All surface equipment associated with artificial lift should be charged to the Facilities/Equip AFE. Should a Facilities/Equip AFE not be available, code the surface associated equipment to 71033. Having this option does not release the coder of the responsibility of checking to see if a Facilities/Equip AFE has been written.

ALTAVISTA OIL CORPORATION

WELL INFO

Well Name:	Doc Holiday #1H	
Location:	Big Horn County, MT	
Field/Formation	Wildcat	
API#:	25-003-22952	
AFE#:	27-18-0265-CP	
Surface Latitude:	45.020407	
Surface Longitude:	-106.71751	
KB	21.0	ft
KOP, MD	7,530	ft, MD
TD	12,500	ft, MD
PBTD, MD	12,500	ft, MD
PBTD, TVD	8,420	ft, TVD
NO XO	N/A	ft, MD
Packer Depth, MD		ft, MD
Heel Perf Limit	8,500	ft, MD
Top Perf (Detail Tab)	8,501	ft, MD
Stim. Lateral:	4,000	ft, MD
Total Stages:	27	
Clusters/stage:	4	
Cluster Spacing	37.0	ft
Avg. Stage Length	149	ft
Plug to Perf Distanc	19	ft

Shot Progression (Stage 1 - ACTUAL)

Cluster #	Gun, ft	SPF	Holes	Phasing
1	1	6	6	60
2	1	6	6	60
3	1	6	6	60
4	1	6	6	60
Total:	4		24	

Stage 1 Perforations:	Bottom (Toe)	12,490
FROM TOE PREP ->	Top (Heel)	12,330

Shot Progression (Stages 2-27 - AS PLANNED)

Cluster #	Gun, ft	SPF	Holes	Phasing
1	1	6	6	60
2	1	6	6	60
3	1	6	6	60
4	1	6	6	60
Total:	4		24	

Toe Hardline:	11100 ft MD
Heel Hardline:	7200 ft MD
Marker Joints:	
Other:	NO HARDLINE ISSUES

Directional Survey Information:

Deviation	TVD	MD
Deviation = 20° @	7,896	7,900
Deviation = 40° @	8,070	8,100
Deviation = 60° @	8,202	8,300
Deviation = 80° @	8,276	8,500
Deviation = 90° @	8,287	8,600

Casing Detail

Casing	HOLE SIZE	OD	Wt.	Grade	Thread	ID, in	Drift, in	Top, MD	(Connection) Bottom, MD	Burst, psi	80% Burst	TOC, ft	TVD
Surface	17 1/2	13 3/8	54.50	J-55	BTC	12.615	12.46	Surface	2,023	2,730	2,184	Surface	2,023
Intermediate	12 1/4	9 5/8	43.50	L-80	LTC	8.755	8.60	Surface	7,462	7,930	6,344	Surface	7,461
Production 1	8 1/2	5 1/2	20.00	HCP-110	DWC	4.778	4.65	Surface	12,461	12,640	10,112	Surface	8,214
Production 2											-		-

Production Casing Volumes to PBTD: 277.22 BBL (in. Capacity 0 BBL/ft & 5.5 in. Capacity 0.02218 BBL/ft)

ALTAVISTA
OIL CORPORATION

CURRENT WELLBORE DIAGRAM

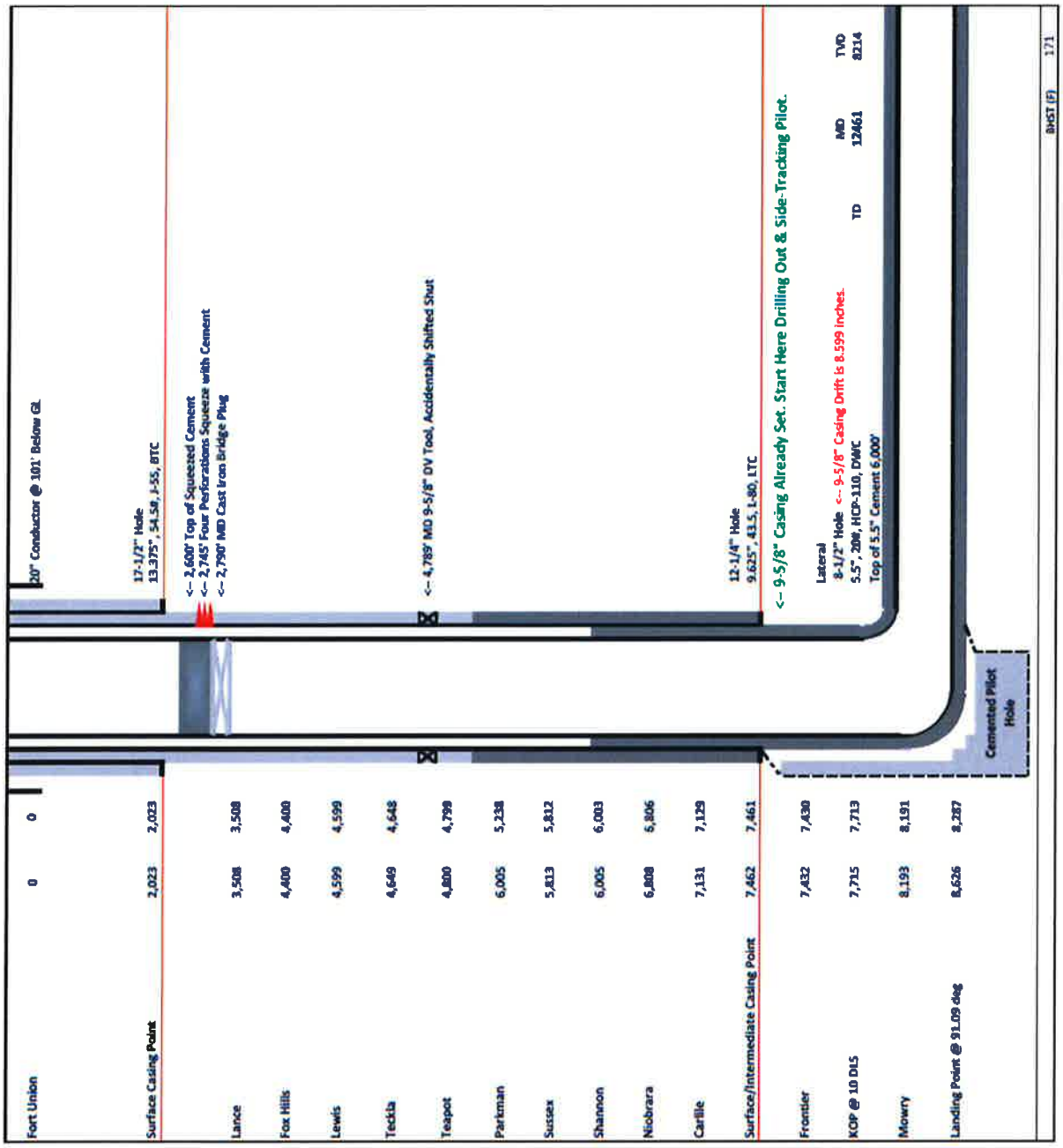

ALTAVISTA OIL CORPORATION

FRAC STACK DIAGRAM

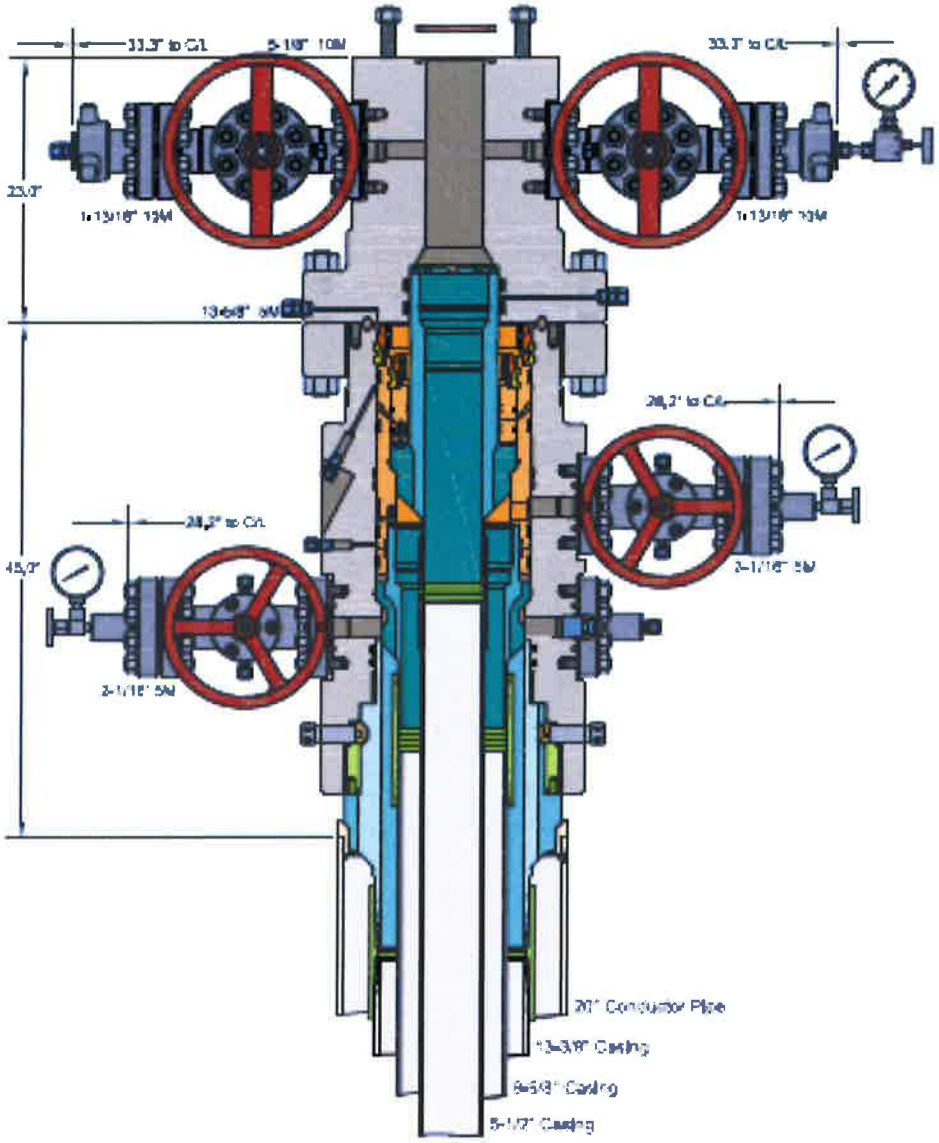

ALTAVISTA OIL CORPORATION

DRILLOUT BHA DIAGRAM

Tool OD (in.)	Tool ID (in.)	Tool Diagram	Length (ft.)	Description	Connection (Make-Up Torque)	Drop Ball	Part #/Asset #
2.88	0.94		1.64	Coil Connector / Back Pressure Valve (MHA) f/ 2.00" Coil	2-3/8" PAC Pin Dn (2,300 Ft/Lbs)		MHA287-705
2.88	1.00		3.83	Hailey Bi-Directional jar	2-3/8" PAC Box Up (2,300 Ft/Lbs) x 2-3/8" PAC Pin Dn (2,300 Ft/Lbs)		
2.88	0.69		2.24	Hydraulic Disconnect	2-3/8" PAC Box Up (2,300 Ft/Lbs) x 2-3/8" PAC Pin Dn (2,300 Ft/Lbs)	3/4" (.750)	MHA287-900
2.88	0.56		1.58	Dual Circulating Sub w/Rupture Disc	2-3/8" PAC Box Up (2,300 Ft/Lbs) x 2-3/8" PAC Pin Dn (2,300 Ft/Lbs)	5/8" (.625)	DCS287-400
2.88			2.23	XRV Extended Reach Tool Optimized for 3-3.5 BPM	2-3/8" PAC Box Up (2,300 Ft/Lbs) x 2-3/8" PAC Pin Dn (2,300 Ft/Lbs)		XRV288-700
2.88	1.00		1.50	Bend Sub	2-3/8" PAC Box Up (2,300 Ft/Lbs) x 2-3/8" PAC Pin Dn (2,300 Ft/Lbs)		BPV288-400
2.88			13.52	Titan Supermax Motor w/ Power Plus 4.7	2-3/8" PAC Box Up (2,300 Ft/Lbs) x 2-3/8" PAC Box Dn (2,300 Ft/Lbs)		MTR287-761
3.75	1.25		0.50	Rotary Sub	2-3/8" PAC Pin Up (2,300 Ft/Lbs) x 2-7/8" REG Box Dn (5,479 Ft/Lbs)		
4.50			0.75	Roller Cone Bit	2-3/8" REG Pin Up (2,586 Ft/Lbs)		RBIT450-238R
		Overall Length:	27.79	BHA Prepared By: MICHAEL WHATLEY		Date: 5/3/16	

Notes: Jar length is unstroked add (.8) max pull on on loaded jar 32k

CELLS WITH BLUE BACKGROUND ARE THE ONLY CELLS TO BE EDITED

Fracture Start Date/Time:	
Fracture End Date/Time:	
State:	Montana
County:	Big Horn
API Number:	25-003-22952-0000
Operator Number:	
Well Name:	Doc Holiday 1H
Federal Well:	No
Indian Well:	No
Longitude:	-106.71751
Latitude:	45.020407
Long/Lat Projection:	NAD83
True Vertical Depth (TVD):	8211
Total Clean Fluid Volume* (gal):	5,536,230

Frac Focus Chemical Disclosure Registry

(e.g. XX-XXX-XXXXX-0000)

anga America's Natural Gas Alliance

Additive	Specific Gravity	Additive Quantity	Mass (lbs)	
Water	8.34	5,536,230	46,172,158	gal
Potassium Chloride	0.09	5,536,230	498,261	gal
FRP-E3-8	10.01	491	4,914	gal
Surflow 420	9.12	1,384	12,617	gal
CSA-13	8.97	11,072	99,316	gal
LGA-3J	8.80	25,225	221,957	gal
BFH-98	10.98	3,027	33,236	gal
XLB-88	10.43	688	7,172	gal
XLB-36	10.84	3,577	38,775	gal
BHL-68	8.76	2,523	22,096	gal
BE-5HT	(already reported in lbs)	2,523	2,523	lb
BFL-28	9.34	5,045	47,120	gal
SCI-67	9.16	1,384	12,682	gal
SCI-38	10.43	1,384	14,428	gal
Aquaca 714	8.64	1,661	14,346	gal
Crystalline Silica Quartz	(already reported in lbs)	7,876,260	7,876,260	lb
HCL-7.5	8.64	3,500	30,237	gal
ICI-5L	10.34	7	72	gal
ASF-67	7.79	35	273	gal
			Total Slurry Mass (Lbs)	
			55,108,442	

Ingredients Section:

Trade Name	Supplier	Purpose	Ingredients	Chemical Abstract Service Number (CAS #)	Maximum Ingredient Concentration in Additive (% by mass)**	Mass per Component (LBS)	Maximum Ingredient Concentration in HF Fluid (% by mass)**	Comments
Water	Operator	Carrier	Carrier	7732-18-5	100.00%	46,172,158	83.78418%	
Potassium Chloride	Operator	Clay Control	MSDS and Non-MSDS Ingredients Listed Below			498,261	0.90415%	
FRP-E3-8	Liberty Oilfield Services	Friction reduction	MSDS and Non-MSDS Ingredients Listed Below			4,914	0.00892%	
Surflow 420	Liberty Oilfield Services	Surfactant	MSDS and Non-MSDS Ingredients Listed Below			12,617	0.02289%	
CSA-13	Liberty Oilfield Services	Clay Control	MSDS and Non-MSDS Ingredients Listed Below			99,316	0.18022%	
LGA-3J	Liberty Oilfield Services	Guar Slurry	MSDS and Non-MSDS Ingredients Listed Below			221,957	0.40276%	
BFH-98	Liberty Oilfield Services	Buffer	MSDS and Non-MSDS Ingredients Listed Below			33,236	0.06031%	
XLB-88	Liberty Oilfield Services	Crosslinker	MSDS and Non-MSDS Ingredients Listed Below			7,172	0.01302%	
XLB-36	Liberty Oilfield Services	Crosslinker	MSDS and Non-MSDS Ingredients Listed Below			38,775	0.07036%	
BHL-68	Liberty Oilfield Services	Breaker	MSDS and Non-MSDS Ingredients Listed Below			22,096	0.04010%	
BHE-18	Liberty Oilfield Services	Breaker	MSDS and Non-MSDS Ingredients Listed Below			2,523	0.00458%	
BFL-28	Liberty Oilfield Services	Buffer	MSDS and Non-MSDS Ingredients Listed Below			47,120	0.08550%	
SCI-67	Liberty Oilfield Services	Scale Inhibitor	MSDS and Non-MSDS Ingredients Listed Below			12,682	0.02301%	
SCI-38	Liberty Oilfield Services	Scale Control	MSDS and Non-MSDS Ingredients Listed Below			14,428	0.02618%	
Aquaca 714	WST	Biocide	MSDS and Non-MSDS Ingredients Listed Below			14,346	0.02603%	
Crystalline Silica Quartz	Liberty Oilfield Services	White Sand	MSDS and Non-MSDS Ingredients Listed Below			7,876,260	14.29229%	
HCL-7.5	Liberty Oilfield Services	Solvent	MSDS and Non-MSDS Ingredients Listed Below			30,237	0.05487%	
ICI-5L	Liberty Oilfield Services	Iron Sequestering Agent	MSDS and Non-MSDS Ingredients Listed Below			72	0.00013%	
ASF-67	Liberty Oilfield Services	Nonionic Non-Emulsifier	MSDS and Non-MSDS Ingredients Listed Below			273	0.00049%	
The trade name(s) of the additive(s) used, supplier(s), and the purpose(s) of the additive(s) are			listed above. The ingredient(s) for the above additive(s) are listed below.					
	Liberty Oilfield Services	White Sand	Crystalline Silica in the form of Quartz	14808-60-7	99.90%	7,868,384	14.27800%	
	Operator	Clay Control	Potassium Chloride	7447-40-7	100.00%	498,261	0.90415%	
	Liberty Oilfield Services	Guar Slurry	White mineral oil (petroleum)	8042-47-5	65.00%	144,272	0.26180%	
	Liberty Oilfield Services	Clay Control	Choline Chloride	67-48-1	75.00%	74,487	0.13516%	
	Liberty Oilfield Services	Buffer	Acetic Acid	64-19-7	80.00%	37,696	0.06840%	
	Liberty Oilfield Services	Clay Control	Water	7732-18-5	30.00%	29,795	0.05407%	
	Liberty Oilfield Services	Buffer	Sodium Hydroxide Solution	1310-73-2	60.00%	19,942	0.03619%	
	Liberty Oilfield Services	Crosslinker	Ulexite	1319-33-1	50.00%	19,387	0.03518%	
	Liberty Oilfield Services	Crosslinker	Petroleum distillates, hydrotreated light	64742-47-8	40.00%	15,510	0.02814%	
Surflow 420	Liberty Oilfield Services	Surfactant	Alkyl Sulfonic Acid Amine Salt	Approved as per MBOGC	100.00%	12,617	0.02289%	
	WST	Biocide	Water	7732-18-5	83.00%	11,907	0.02161%	
	Liberty Oilfield Services	Scale Control	Ethylene glycol	107-21-1	40.00%	5,771	0.01047%	
	Liberty Oilfield Services	Scale Control	2-Propenoic acid, polymer with 2,5-furandione, sodium salt	52255-49-9	30.00%	4,328	0.00785%	
	Liberty Oilfield Services	Crosslinker	Ethylene glycol	107-21-1	55.00%	3,945	0.00716%	
	Liberty Oilfield Services	Scale Control	Phosphonic acid, [[(phosphonomethyl)imino]bis[2,1-ethanediylnitrilobis(methylene)]]tetrakis	15827-60-8	25.00%	3,607	0.00655%	
	Liberty Oilfield Services	Scale Control	Phosphonic acid, [[(phosphonomethyl)imino]bis[6,1-hexanediylnitrilobis(methylene)]]tetrakis	34690-00-1	20.00%	2,886	0.00524%	
	Liberty Oilfield Services	Scale Control	2-Propenoic acid, polymer with sodium phosphinate	71050-62-9	20.00%	2,886	0.00524%	
BE-5HT	Liberty Oilfield Services	Breaker	Proprietary Ingredient	Approved as per MBOGC	100.00%	2,523	0.00458%	
	Liberty Oilfield Services	Solvent	Hydrochloric Acid	7647-01-0	7.50%	2,268	0.00412%	
	Liberty Oilfield Services	Friction reduction	Distillates (petroleum), hydrotreated light	64742-47-8	45.00%	2,211	0.00401%	
	Liberty Oilfield Services	Crosslinker	Borate Salt	1303-96-4	30.00%	2,152	0.00390%	
	WST	Biocide	Glutaraldehyde	111-30-8	14.00%	2,008	0.00364%	
	Liberty Oilfield Services	Breaker	Ammonium Persulfate	7727-54-0	75.00%	1,892	0.00343%	
	Liberty Oilfield Services	Breaker	Tert-Butyl Hydroperoxide	75-91-2	7.00%	1,547	0.00281%	
	Liberty Oilfield Services	Scale Control	Phosphonic acid, (1,6-hexanediyl)bis(nitrilobis(methylene))tetrakis	23605-74-5	5.00%	721	0.00131%	
	Liberty Oilfield Services	Scale Inhibitor	Alkyl phosphonic acid	129828-36-0	4.23%	536	0.00097%	
	WST	Biocide	Quaternary Ammonium Compounds	68424-85-1	2.50%	359	0.00065%	
	Liberty Oilfield Services	Friction reduction	Alcohols, C12-16, ethoxylated propoxylated	68213-24-1	5.00%	246	0.00045%	
	Liberty Oilfield Services	Nonionic Non-Emulsifier	Methanol	67-56-1	50.00%	136	0.00025%	
	Liberty Oilfield Services	Scale Inhibitor	Ammonium chloride	12125-02-9	0.93%	118	0.00021%	
	Liberty Oilfield Services	Iron Sequestering Agent	Citric acid	77-92-9	60.00%	43	0.00008%	
	WST	Biocide	Ethanol	64-17-5	0.30%	43	0.00008%	
	Liberty Oilfield Services	Scale Inhibitor	Methyl alcohol	67-56-1	0.14%	18	0.00003%	
	Liberty Oilfield Services	Scale Inhibitor	Ammonia, anhydrous	7664-41-7	0.13%	16	0.00003%	

*Total Water Volume sources may include fresh water, produced water, and/or recycled water

** Information is based on the maximum potential for concentration and thus the total may be over 100%

All component information listed was obtained from the supplier's Material Safety Data Sheets (MSDS). As such, the Operator is not responsible for inaccurate and/or incomplete information. Any questions regarding the content of the MSDS should be directed to the supplier who provided it. The Occupational Safety and Health Administration's (OSHA) regulations govern the criteria for the disclosure of this information. Please note that Federal Law protects "proprietary", "trade secret", and "confidential business information" and the criteria for how this information is reported on an MSDS is subject to 29 CFR 1910.1200(i) and Appendix D.